Tube CAD

Grounded Cathode Amplifier

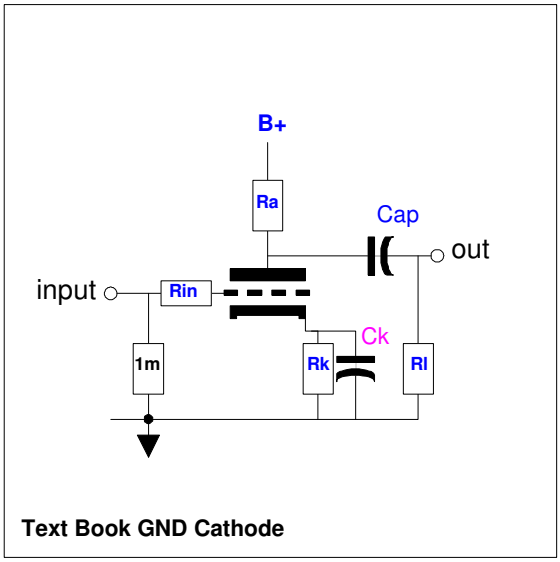

The textbook Grounded Cathode Amplifier. The most common and easiest of tube circuits. The triode is cathode biased. The output is phase inverted. The gain never exceeds the mu of the triode. Still, a very good line stage can be made from this circuit.

Tube

Tube = 6SN7
Number = 1
mu = 20
gm = 2.6 ma/v
rp = 7700 ohm
Imax = 20 ma
Vmax = 450 v
Wmax = 3.75 w
Cgp = 4 pf

Circuit Setup

Rk = 440 ohm
Rk bypassed
Rin = 25 k
RL = 100 k
Ra = 22 k
Cap = 1µf
I = 5.0ma
V B+ = 215v

AC Results

Gain = 14.02
Phase = inverts
Z input = 124 k
F -3dB low = 1.51 hz

Gain dB = 22.9 dB
PSRR = -12.2 dB
Z output = 5.4 k
F -3dB high = 114 khz

DC Results

V tube = 103 v
Vbias = -2.22 v
Vth = 7.43 v
Plate Dis. = 514 mw
Ra Dis. = 550 mw

VRa = 110 v
Vg DC = 0 v
Vmax out = -47/+90.2 v
Total Dis. = 1.08 w
W Rk = 11 mw

Calculated Part Values

Rk = 442 ohm

Cap Rk = 39 µf